dynamic series
Efficient. Cutting Edge. Reliable

# COMET 12W
## Oval IP54 Bulkhead

The COMET 12W Oval Bulkhead is an oval shaped low profile luminaire. Constructed from poly-carbonate, it is a robust, corrosion free and extremely durable fitting, designed for exterior use on walls and eaves. It is also suited for marine environments.

12W Exterior Bulkhead, with a 5 Year warranty. A bright light that contributes to the security around buildings. Available in Cool White.

## SPECIFICATIONS

### Material Specifications

| | |
|---|---|
| **Material** | PC Base & Cover |
| **Dimensions** | 198mm x 97mm x 39mm |
| **Ingress Protection** | IP54 |
| **Benefits** | White & Black Trims included |
| **Warranty** | 5 Year Replacement |

### Electrical Specifications

| | |
|---|---|
| **Power Supply** | Integral, Non-Dim |
| **Input Voltage** | 240V |
| **Operating Temperature (Ta)** | -20°C to +40°C |
| **Connection Method** | Hard Wiring Required |

### Optic Specifications

| | |
|---|---|
| **Light Source** | 12W LED Epistar, SMD2835 |
| **Nominal Lumens** | 900lm |
| **Beam Angle** | 120° |
| **CRI** | > 80Ra |
| **Reported L70 (Hours)** | > 40,000 Hrs |

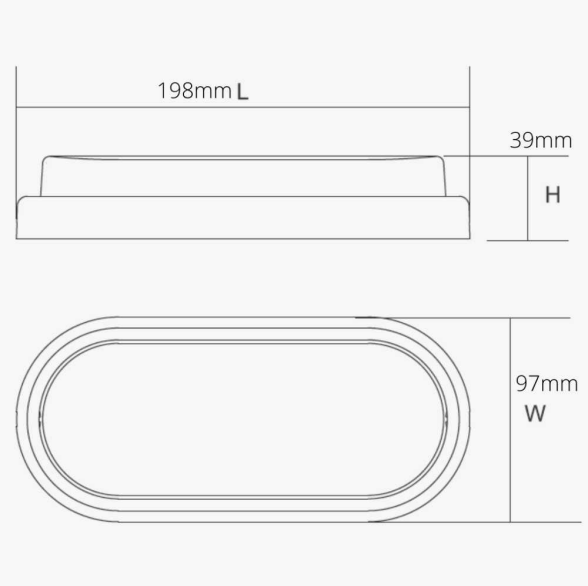


## VARIATIONS

| | |
|---|---|
| **LC6531** | COMET 12W Oval Bulkhead, 120°, Non-Dim, 4000K |